kielle

10215100

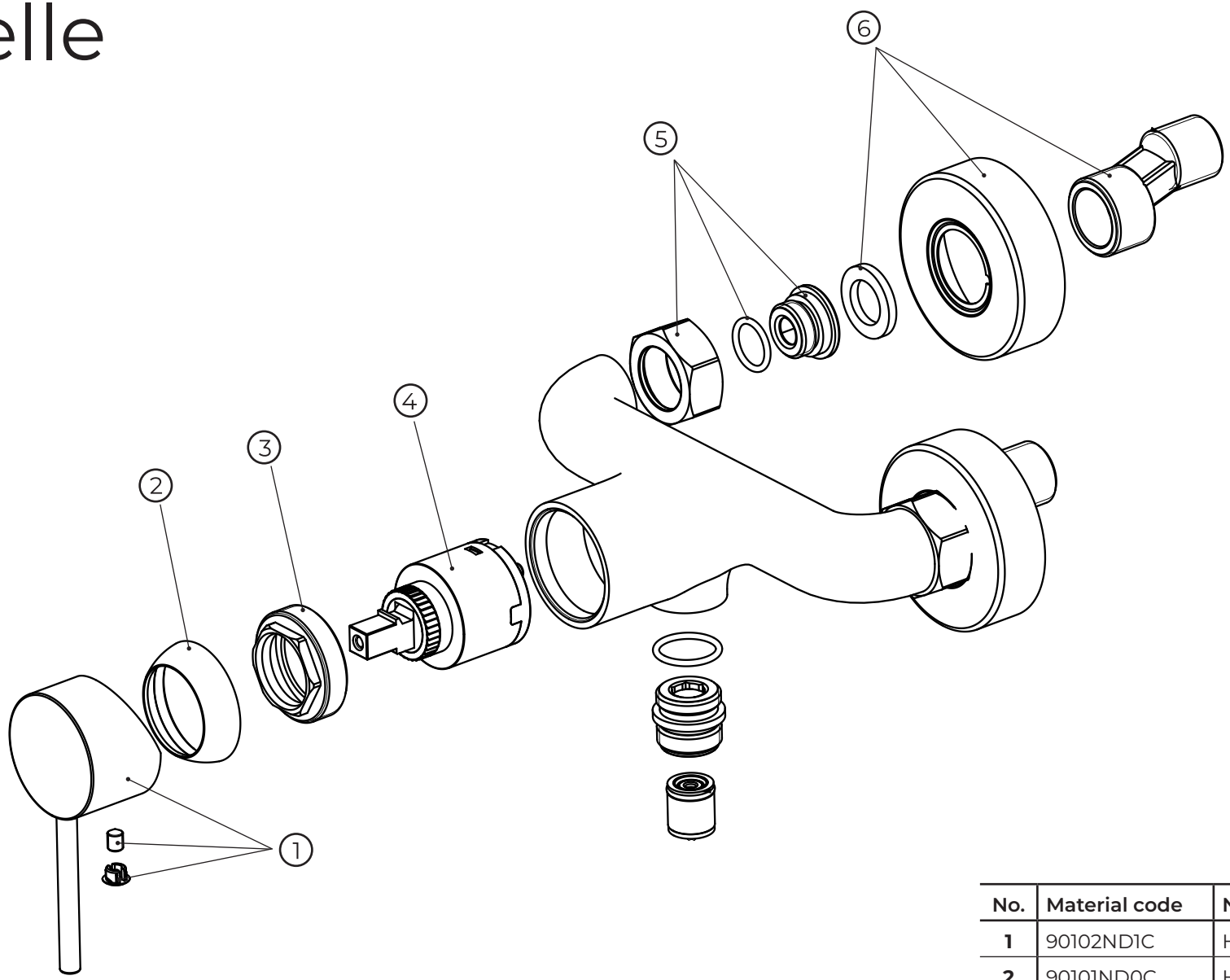

No.	Material code	Name	QTY
1	90102ND1C	Handle chrome	1
2	90101ND0C	Handle cap cover chrome	1
3	90101ND03	Cartridge fix nut	1
4	90101ND01	Cartridge	1
5	90101ND2C	Inlet set chrome	2
6	90101ND3C	Cover chrome	2