Sinks

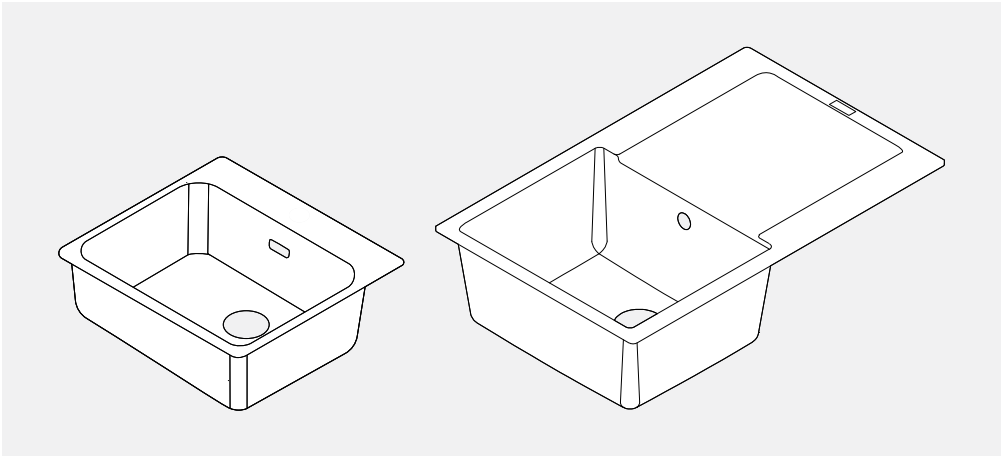

EN	Installation and user manual	Sinks
DE	Installations- und Gebrauchsanweisung	Spüle
FR	Manuel d'installation et mode d'emploi	Eviers
NL	Installatie- en gebruikershandleiding	Spoeltafels
IT	Manuale per l'installazione e l'uso	Lavelli
ES	Manual de instalación y usario	Fregaderos
PT	Manual de instalação e usuário	Lava-louças
EL	Εγχειρίδιο εγκατάστασης και χρήσης	Νεροχύτες
DA	Installations- og brugermanual	Vaske
NO	Installasjons- og brukermanual	Vasker
SV	Installations- och användarmanual	Tvättställ
CS	Montážní a provozní návod	Dřezy
PL	Instrukcja montażu i obsługi	Zlewozmywaki
SK	Návod na inštaláciu a obsluhu	Drezy
RO	Manual de instalare și utilizare	Chiuvete
BG	Ръководство за монтаж и обслужване	Мивки
UK	Посібник зі встановлення та обслуговування	Мийки
RU	Руководство по установке и обслуживанию	Мойки
TR	Kurulum ve kullanım kılavuzu	Evyeler
ZH	安装和用户手册	水槽
AR	دليل التركيب والاستعمال	أحواض

FRANKE



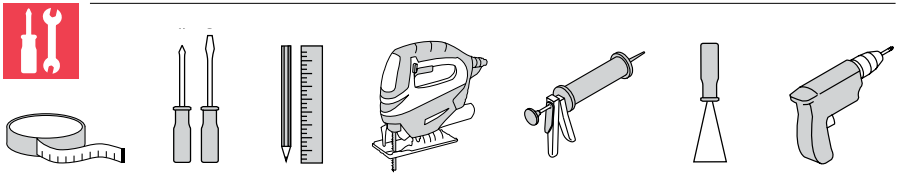

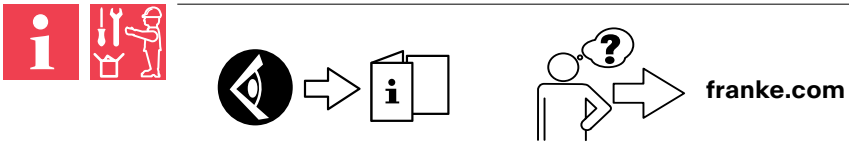

1

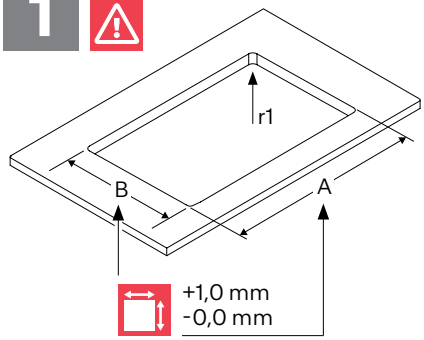

2

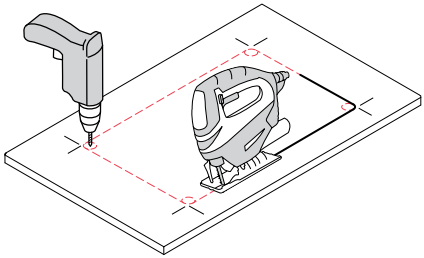

3

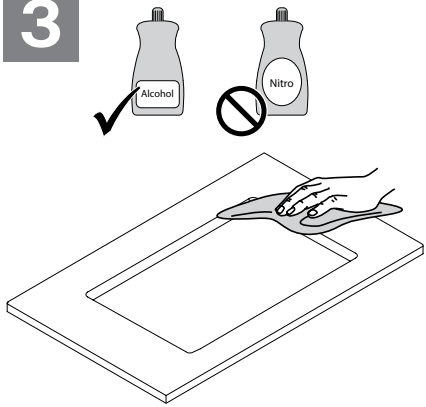

4

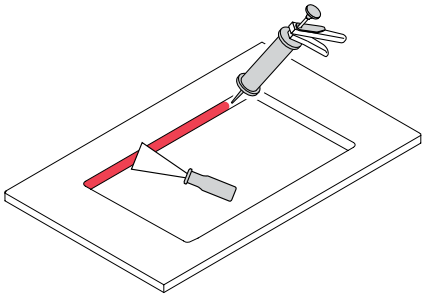

1 Fragranite, Fraceram

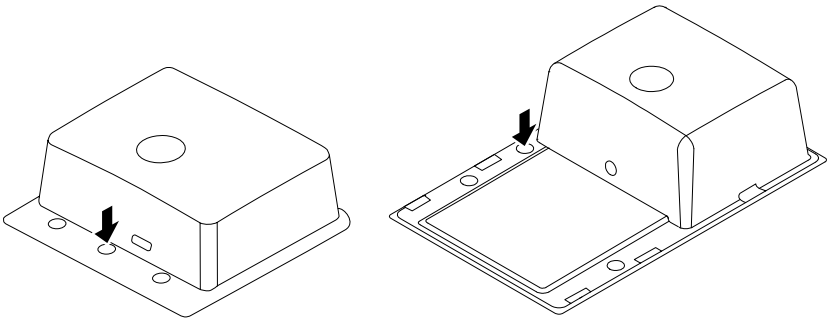

2

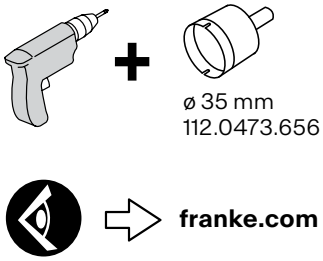

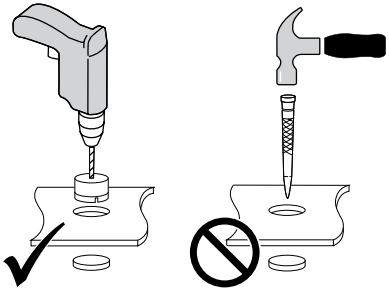

3

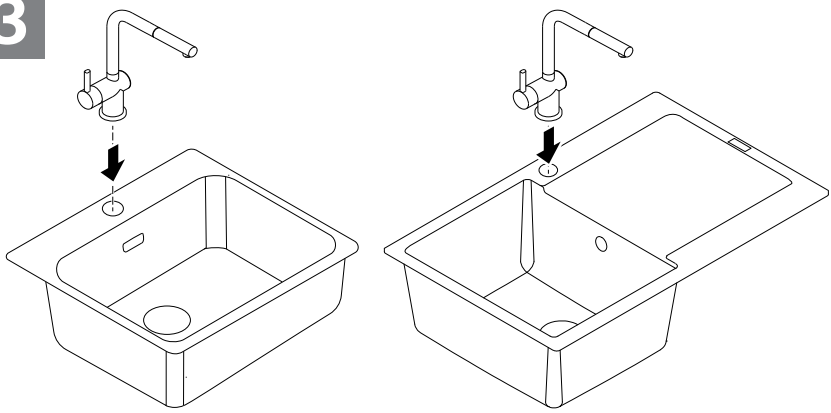

1 Tectonite

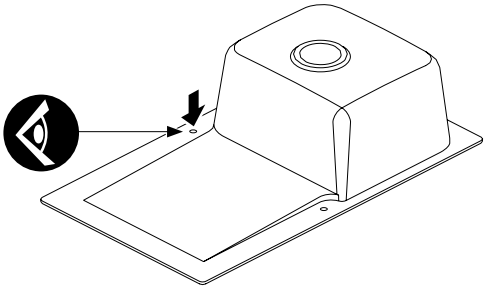

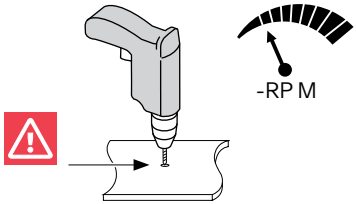

2

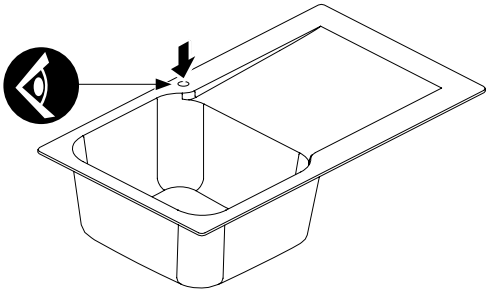

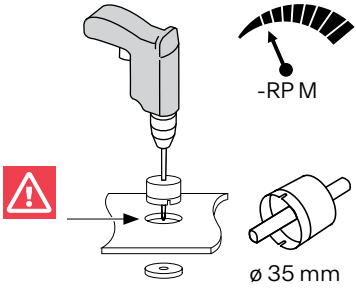

3

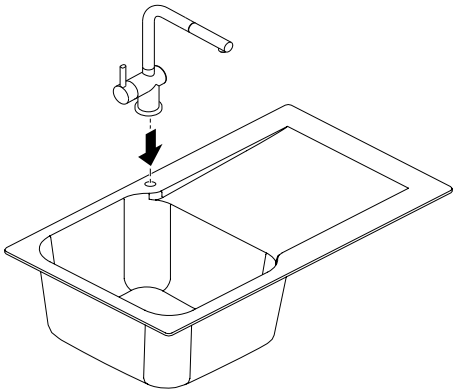

1 A

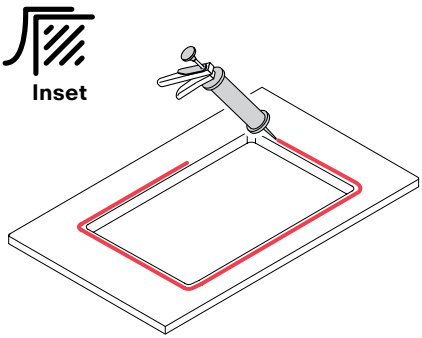

2 A

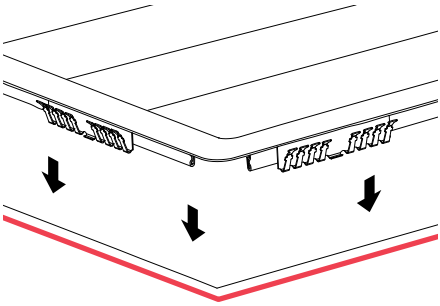

3 A

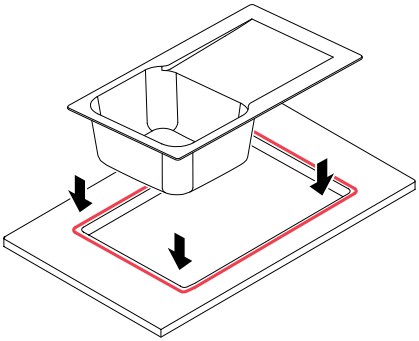

4 A

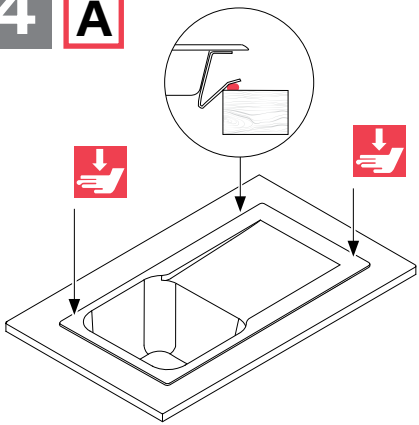

5 A

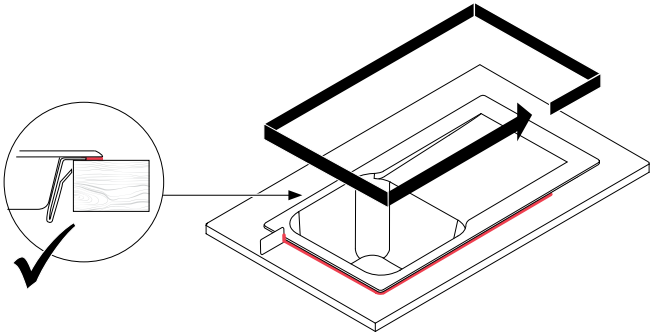

1 B

Inset

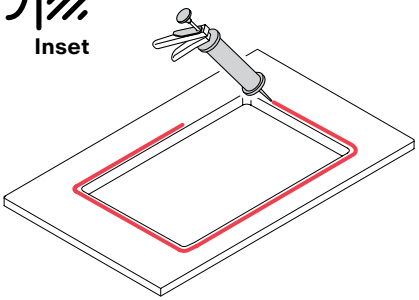

2 B

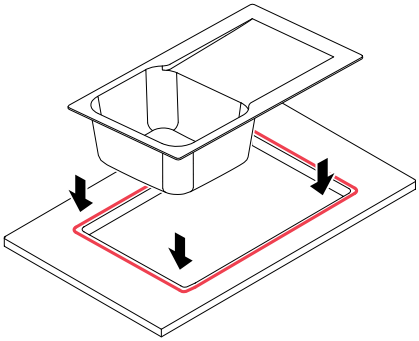

3 B

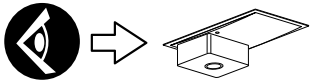

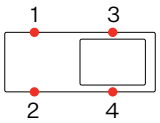

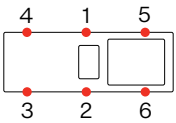

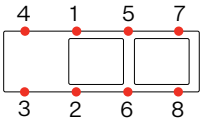



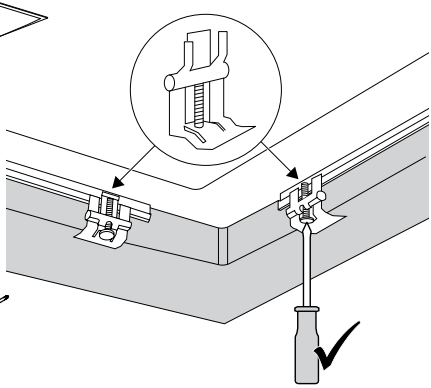

4 B

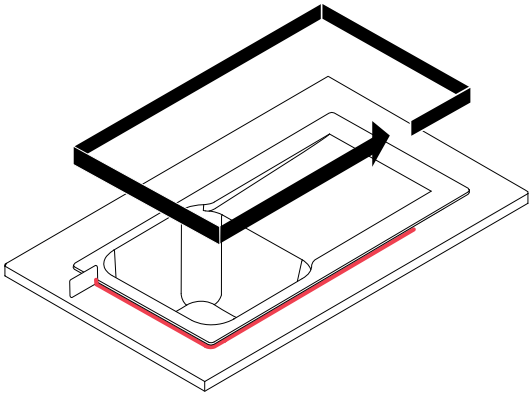

1 C Fraceram

Inset

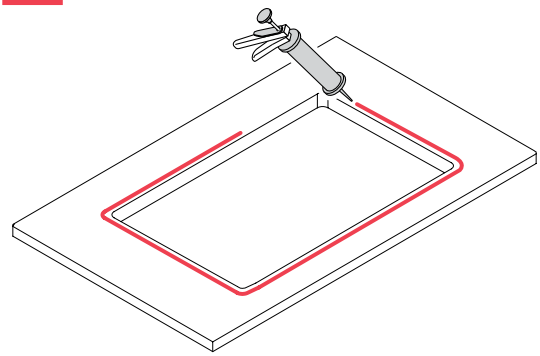

2 C

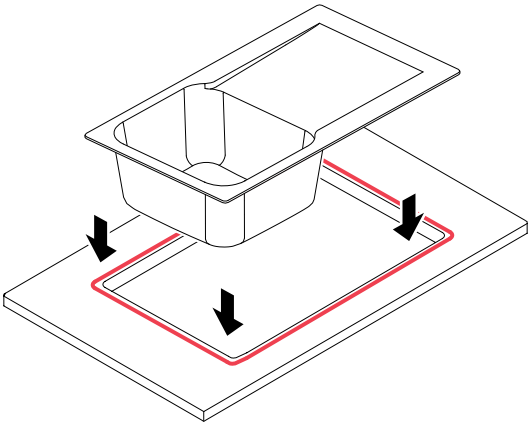

3 C

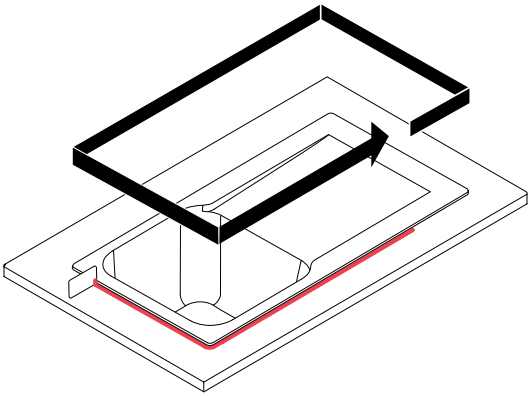



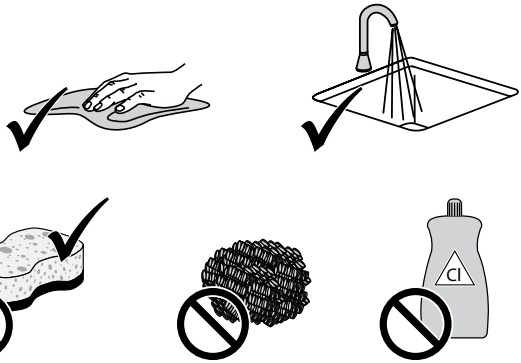

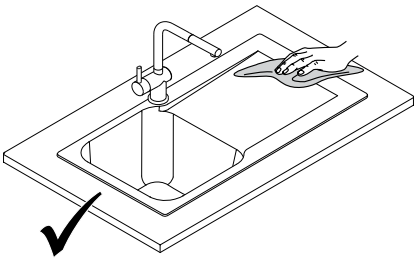

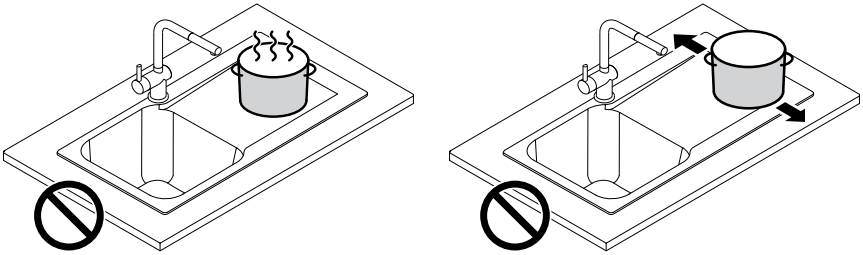



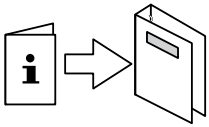

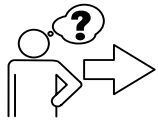

franke.com

1

Undermount

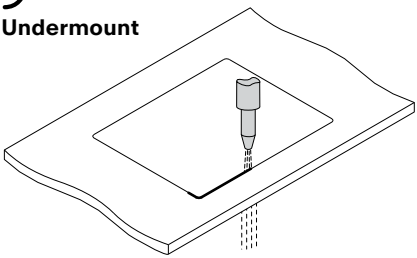

2

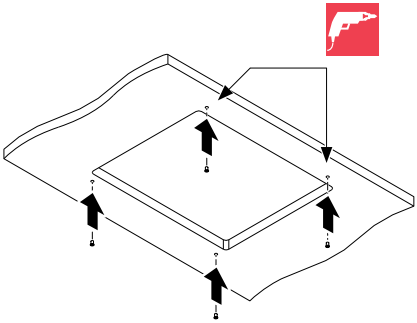

3

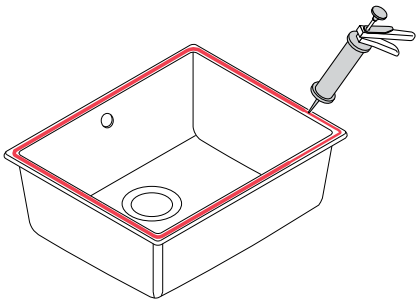

4

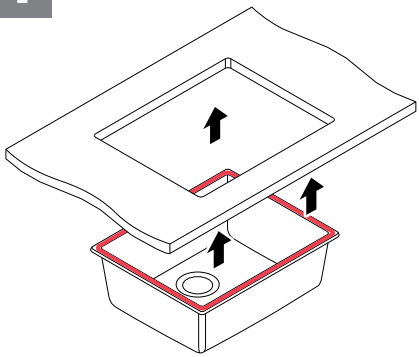

5

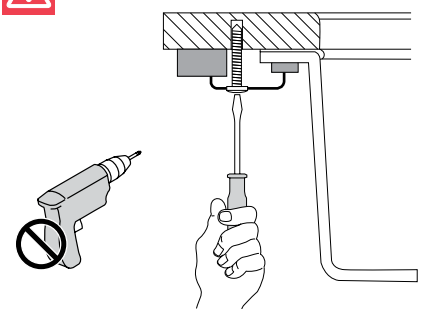

6

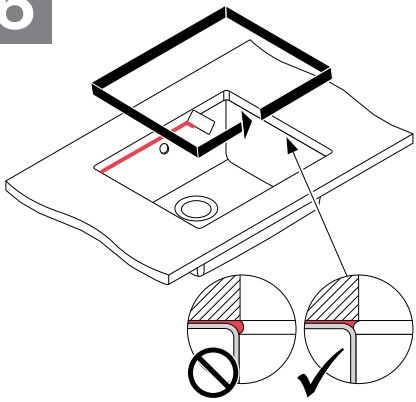

Argentina
Industrias Spar
San Luis S.A.
Buenos Aires 1008
Phone +54 11 4311 7655

Australia
Franke Australia
Dandenong South VIC 3175
Phone: +61 3 9700 9100

Belgium
Franke N.V.
9400 Ninove
Phone +32 54 310 111

Brazil
Franke Sistemas de
Cozinhas Ltda
89.219-600 Joinville-SC
Phone 0800-4773000

Canada
Franke Kindred Canada Ltd.
Midland, ON L4R 4K9
Phone +1 866 687 7465

China
Franke (China) Kitchen
Systems Co., Ltd.
Heshan, Guangdong,
529700
Phone 400 882 9898

Czech Republic
Franke s.r.o.
190 00 Praha 9
Phone +420 281 090 445

Denmark
Franke KS Denmark
8520 Lystrup
Phone +45 8624 9024

Finland
Franke Finland Oy
76850 Naarajärvi
Phone +358 15 341 11

France
Franke France S.A.S.
60230 Chambly
Phone +33 130 289 400

Germany
Franke GmbH
79713 Bad Säckingen
Phone +49 7761 52 199

Greece
Franke Hellas S.A.
19003 Markopoulo Attikis
(Athens)
Phone +30 22991 500 00

Hong Kong SAR
Franke Asia Hong Kong
Quarry Bay
Phone +852 3184 1900

India
Franke Faber India Private
Limited
Pune 412208
Phone 1800 209 3484

Italy
Franke S.p.A.
37019 Peschiera del Garda
Toll-free number
800 359 359

Kazakhstan
Franke Kazakhstan Ltd.
040918 Almaty City
Phone +7 727 297 3812

New Zealand
Franke Australia
Dandenong South VIC 3175
Phone: +64 9 964 0400

Norway
Franke KS Norway
8520 Lystrup, Denmark
Phone +47 35 566 450

Poland
Franke Polska Sp. z o.o.
05-090 Raszyn
Phone +48 22 711 6700

Portugal
Franke Portugal S.A.
2735-531 Cacém
Phone +351 21 426 9670

Romania
Franke Romania SRL
Pantelimon 077145
Phone +40 21 350 1550

Russia
Franke Russia GmbH
248033 Kaluga
Phone +7 800 555 1255

Singapore
Franke Singapore Pte Ltd
33 Ubi Ave 3
01-38 Vertex
Phone +65 9838 2542

Slovak Republic
Franke Slovakia s.r.o.
013 24 Strečno
Phone +420 281 090 445

South Africa
Franke South Africa
Durban 4052
Phone +27 31 450 6300

Spain
Franke España S.A.U.
08174 Sant Cugat del Vallès
Phone +34 934 456 768

Sweden
Franke Futurum AB
930 47 Byske
Phone +46 912 405 00

Switzerland
Franke Küchentechnik AG
4663 Aarburg
Phone +41 800 583 243

Thailand
Franke (Thailand) Co., Ltd.
Bangkok 10110
Phone +66 2 013 7900

The Netherlands
Franke Nederland BV
5611 ZX Eindhoven
Phone +31 85 0261 15 11

Turkey
Franke Mutfak ve Banyo
Sistemleri Sanayi
ve Ticaret A.S.
41480 Gebze Kocaeli/
Turkey
Phone +90 262 644 6595

Ukraine
Franke Ukraina LLC
01042 Kyiv
Phone 0 800 301 801

United Kingdom
Franke UK Ltd.
Manchester M22 5WB
Phone +44 161 436 6280

USA
Franke Home Solutions
North America, LLC
Smyrna, TN 37167
Phone 1 800 626 5771

© Franke Technology and Trademark Ltd., Switzerland | 2024-10-01 | V02 | 993.0715.931 | ID: 20259994

franke.com

993.0715.931

AUT
Franke Gesellschaft mbH
+43 1699 2002
www.franke.at

BEL
Franke N.V.
+32 54 310 111
www.franke.be

BRA
Franke Sistemas de Cozinhas
do Brasil Ltda.
+55 47 343 105 00
www.franke.com.br

CDN
Franke Kindred Canada Limited
+1 705 526 5427
www.frankekindred.com

CHE
Franke Kuechentechnik AG
+41 62 787 3131
www.franke.ch

CHN
Franke (China)
Kitchen System Co. Ltd.
+86 750 841 9288
www.franke.com.cn

CZE
Franke s.r.o.
+42 02 810 904 11
www.franke.cz

DEU
Franke GmbH
+49 7761 520
www.franke.de

DNK
Franke Danmark A/S
+45 86 249 024
www.frankedanmark.dk

EGY
Franke Kitchen Systems Egypt
S.A.E.
+202 833 0390
www.franke.com

ESP
Franke España S.A.U.
+34 93 565 3535
www.franke.es

FIN
Franke Finland Oy
+358 15 3411-1
www.franke.fi

FRA
Franke France S.A.S.
+33 130 289 400
www.franke.fr

GBR
Franke UK Ltd.
+44 161 436 6280
www.franke.co.uk

GEO
Franke Caucasus Ltd.
+995 32 913 172
www.franke.ge

GRC
Franke Hellas S.A.
+30 2299 150 000
www.franke.gr

HKG
Franke Hong Kong Company Ltd.
+86 750 8415288
www.franke.com

IND
Franke India Pvt. Ltd.
+91 22 2491 9557
www.franke.co.in

ITA
Franke S.p.A.
+39 045 644 9311
www.franke.it

KAZ
Franke Kazakhstan Ltd.
+7 3272 501 149
www.franke.com

MAR
Franke Kitchen System SARL
+212 22 674 200
www.franke.ma

NLD
Franke Nederland B.V.
+31 492 585 111
www.franke.nl

NOR
Franke Norge AS
+47 35 566 450
www.franke-norge.no

POL
Franke Polska Sp. z o.o.
+48 22 711 6700
www.franke.pl

PRT
Franke Portugal S.A.
+351 214 26 9670
www.franke.pt

ROM
Franke Romania
+40 21 350 1550
www.franke.ro

RUS
Franke Russia GmbH
+7 812 324 1282
www.franke.ru

SGP
Franke Singapore Private Limited
+65 6276 6898
www.franke.com.sg

SVK
Franke Slovakia s.r.o.
+421 41 733 6200
www.franke.com

SWE
Franke Futurum AB
+46 912 405 00
www.franke.se

THA
Franke Thailand Co., Ltd.
+66 2 236 9777
www.franke.co.th

TUN
Franke Tunisia SARL
+216 71 700 430
www.franke.com

TUR
Franke Mutfak ve Banyo Sistemleri
Sanayi Ticaret A.S.
+90 262 644 65 95
www.franke.com.tr

UKR
Franke Ukraina LLC
+38 044 492 0015
www.franke.ua

USA
Franke Consumer Products Inc.
+1 215 822 6590
www.frankeconsumerproducts.com

ZAR
Franke Kitchen Systems (Pty) Ltd.
+27 31 450 6301
www.franke.co.za

Template v01/27.07.14

Novara-Plus



KITCHEN
SYSTEMS

FRANKE

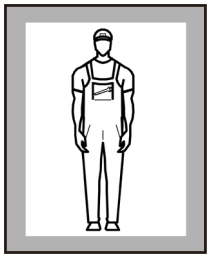

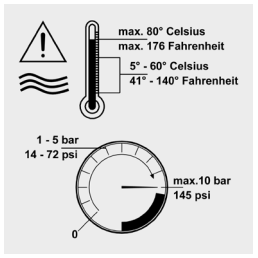
max. 80° Celsius
max. 176 Fahrenheit
5° - 60° Celsius
41° - 140° Fahrenheit
1 - 5 bar
14 - 72 psi
max.10 bar
145 psi
0

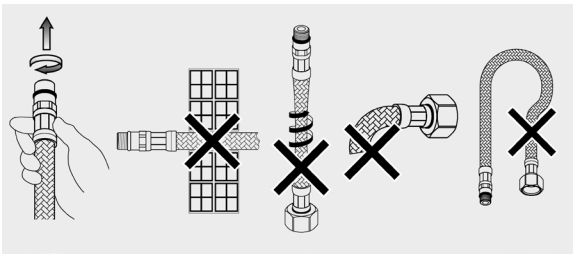

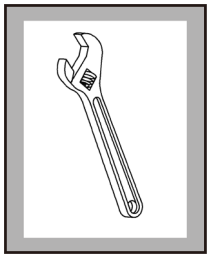

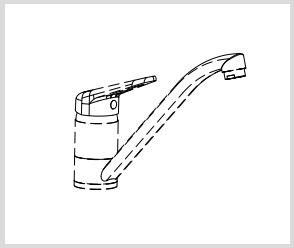

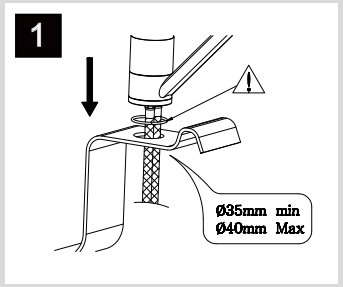
1
Ø35mm min
Ø40mm Max

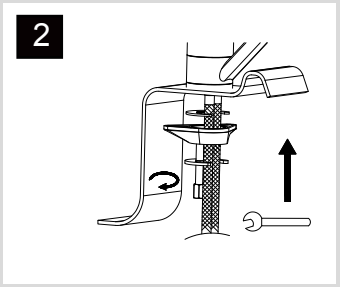
2

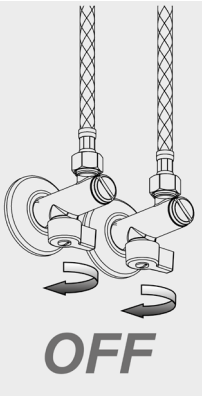
OFF

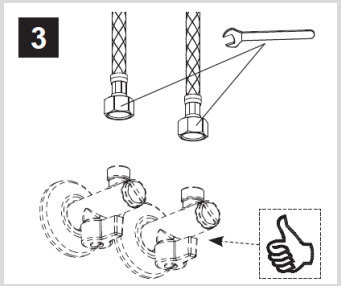
3

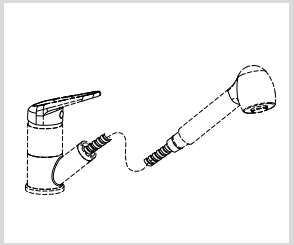

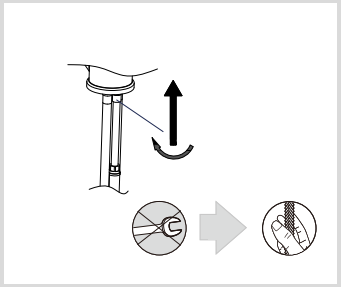

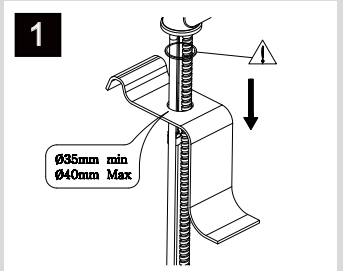
1
Ø35mm min
Ø40mm Max

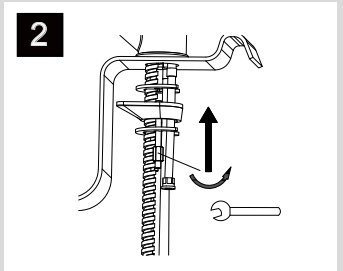
2

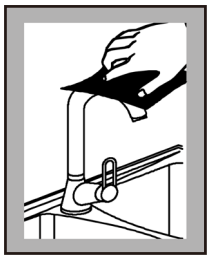

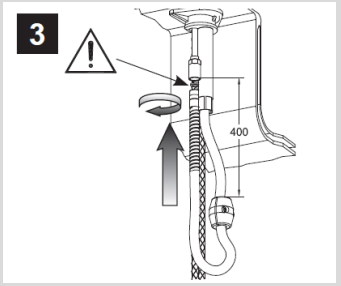
3
400

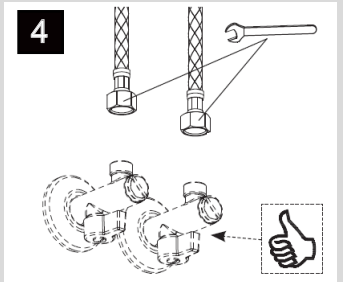
4

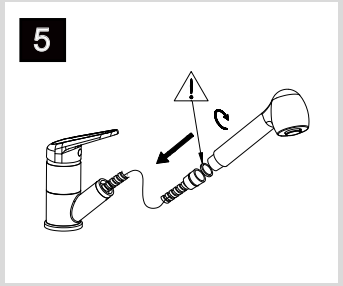
5

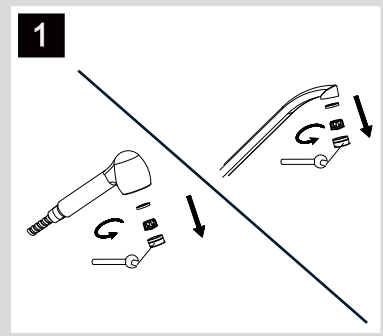
1

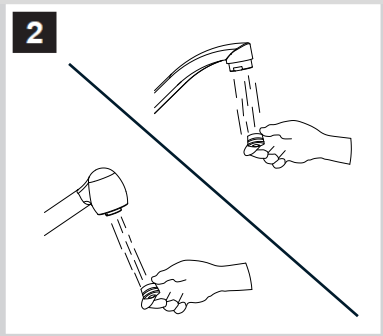
2

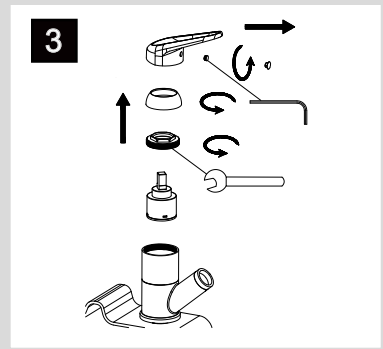
3

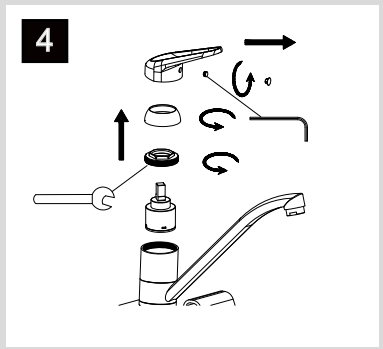
4

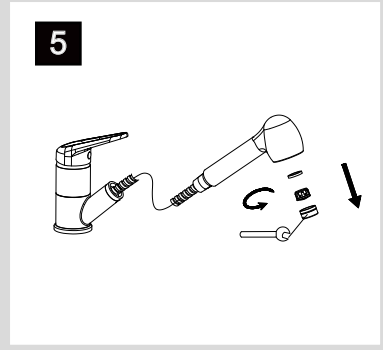
5

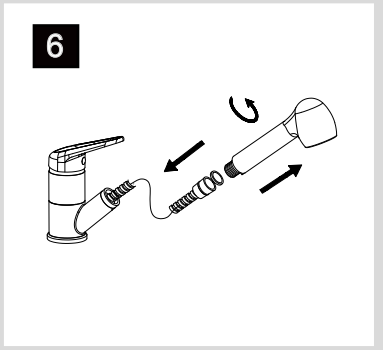
6

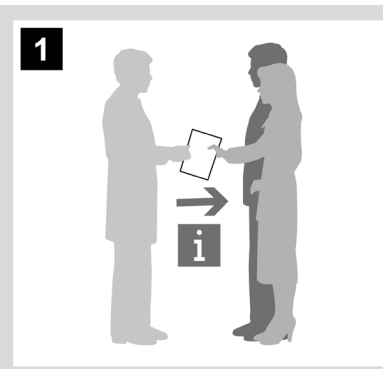
1
i

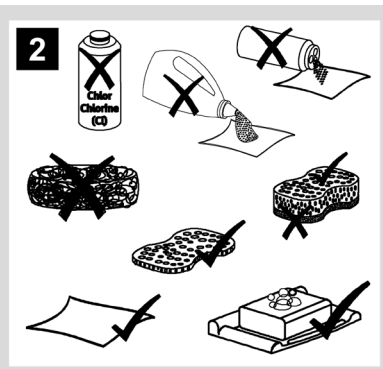
2
Chlor
Chlorine
(Cl)