kielle

30311010

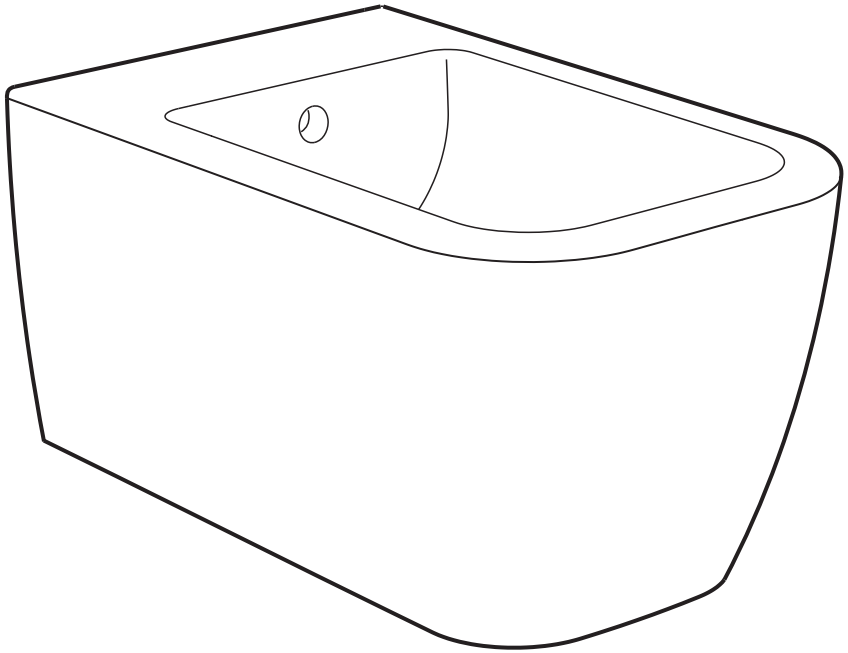

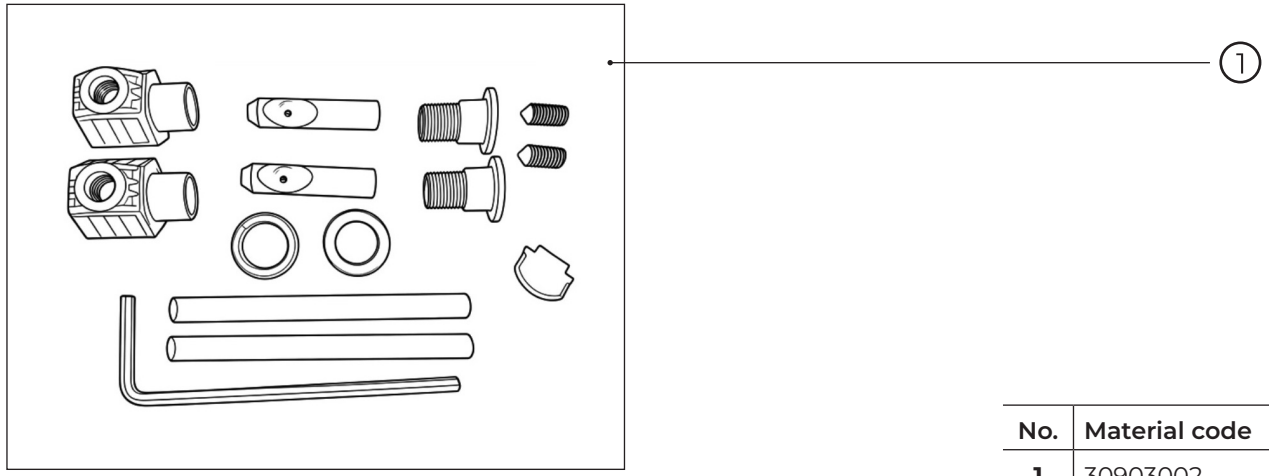

No.	Material code	Name	QTY
1	30903002	fixation set	1