kielle

70028150

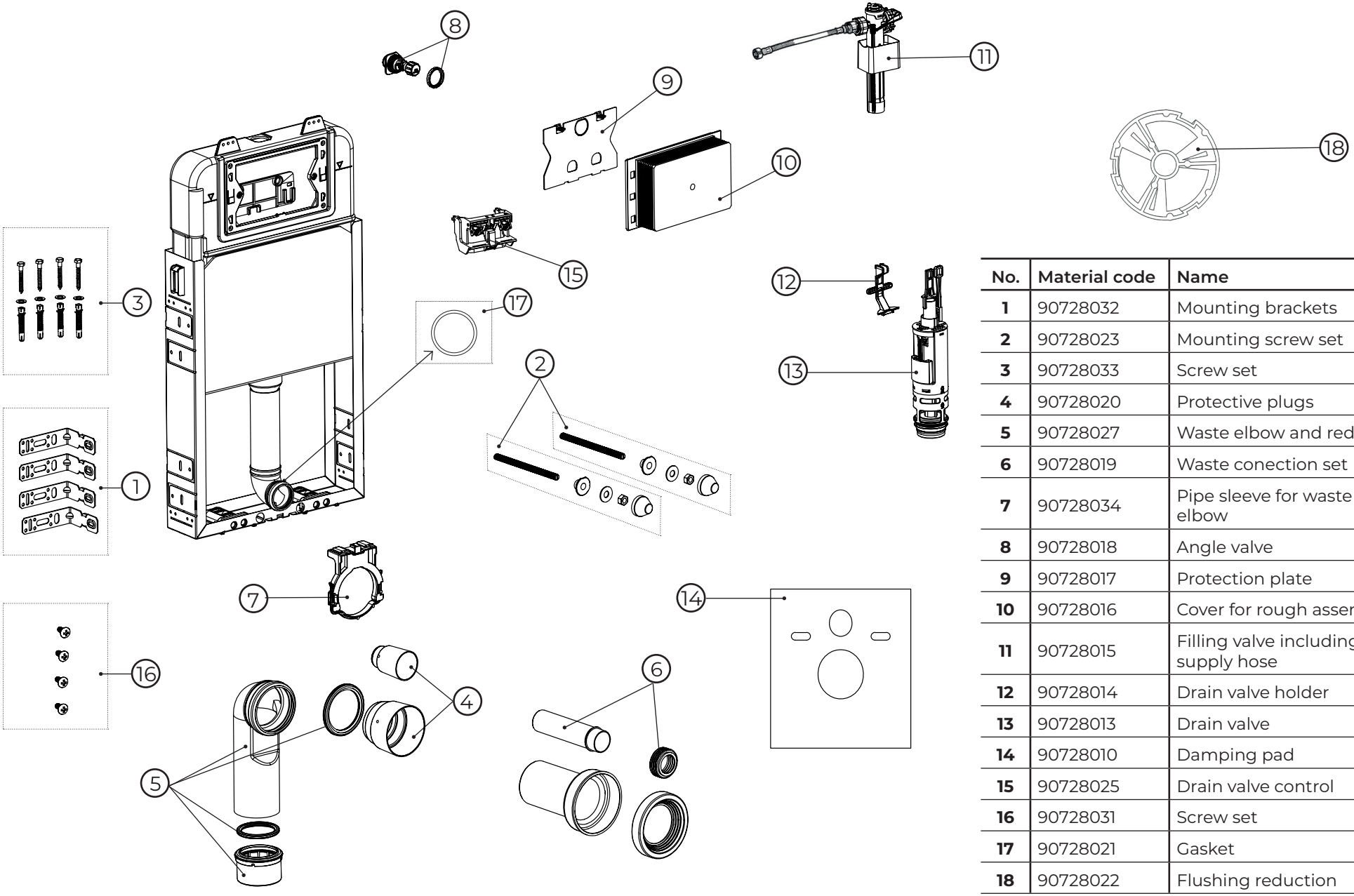

No.	Material code	Name	QTY
1	90728032	Mounting brackets	1
2	90728023	Mounting screw set	1
3	90728033	Screw set	1
4	90728020	Protective plugs	1
5	90728027	Waste elbow and reducer	1
6	90728019	Waste conection set	1
7	90728034	Pipe sleeve for waste elbow	1
8	90728018	Angle valve	1
9	90728017	Protection plate	1
10	90728016	Cover for rough assembly	1
11	90728015	Filling valve including supply hose	1
12	90728014	Drain valve holder	1
13	90728013	Drain valve	1
14	90728010	Damping pad	1
15	90728025	Drain valve control	1
16	90728031	Screw set	1
17	90728021	Gasket	1
18	90728022	Flushing reduction	1

kielle

30102010-SET1

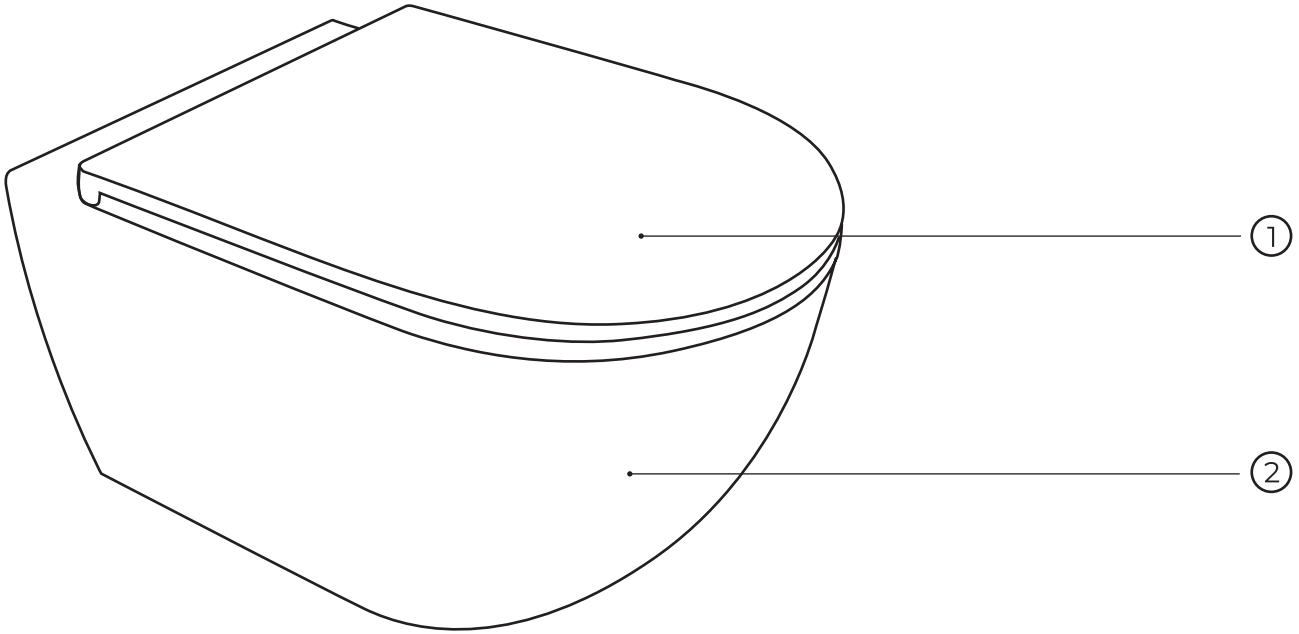

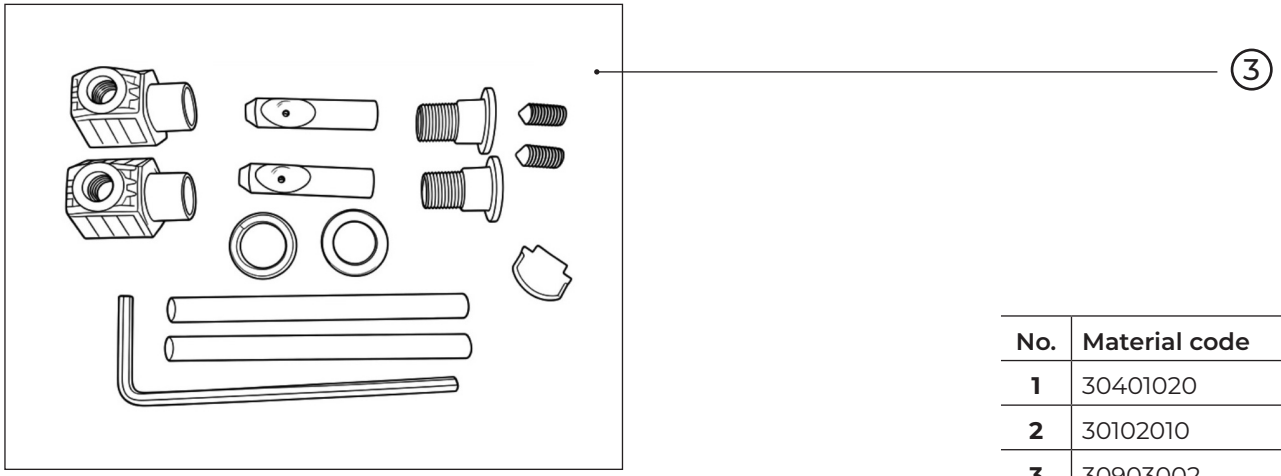

No.	Material code	Name	QTY
1	30401020	seat	1
2	30102010	toilet bowl	1
3	30903002	fixation set	1