kielle

50018S831

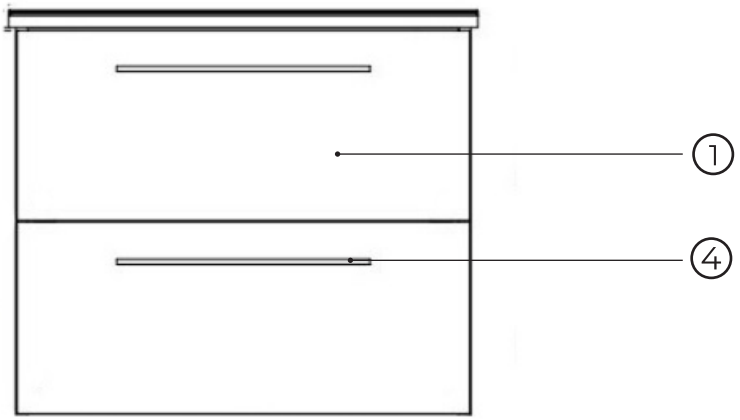

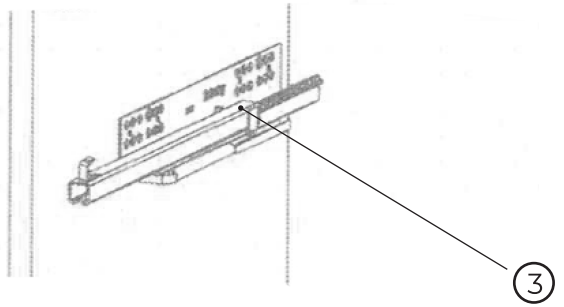

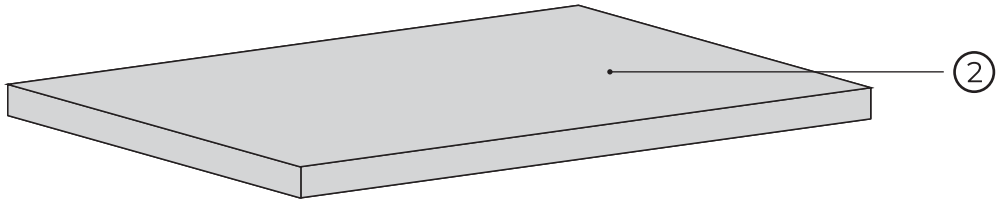

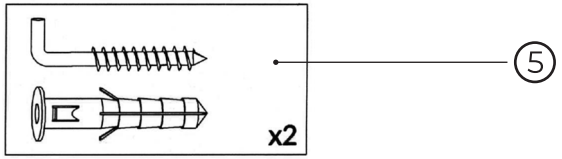

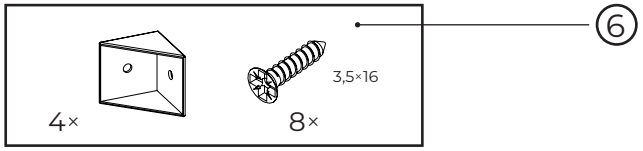

No.	Material code	Name	QTY
1	50018801	Vanity unit	1
2	50501414	Vanity top	1
3	90501ND0	Drawer slide	2
4	50518004	Handle	1
5	90501ND2	Vanity unit assembling package	1
6	90501ND5	Vanity top assembling package	1